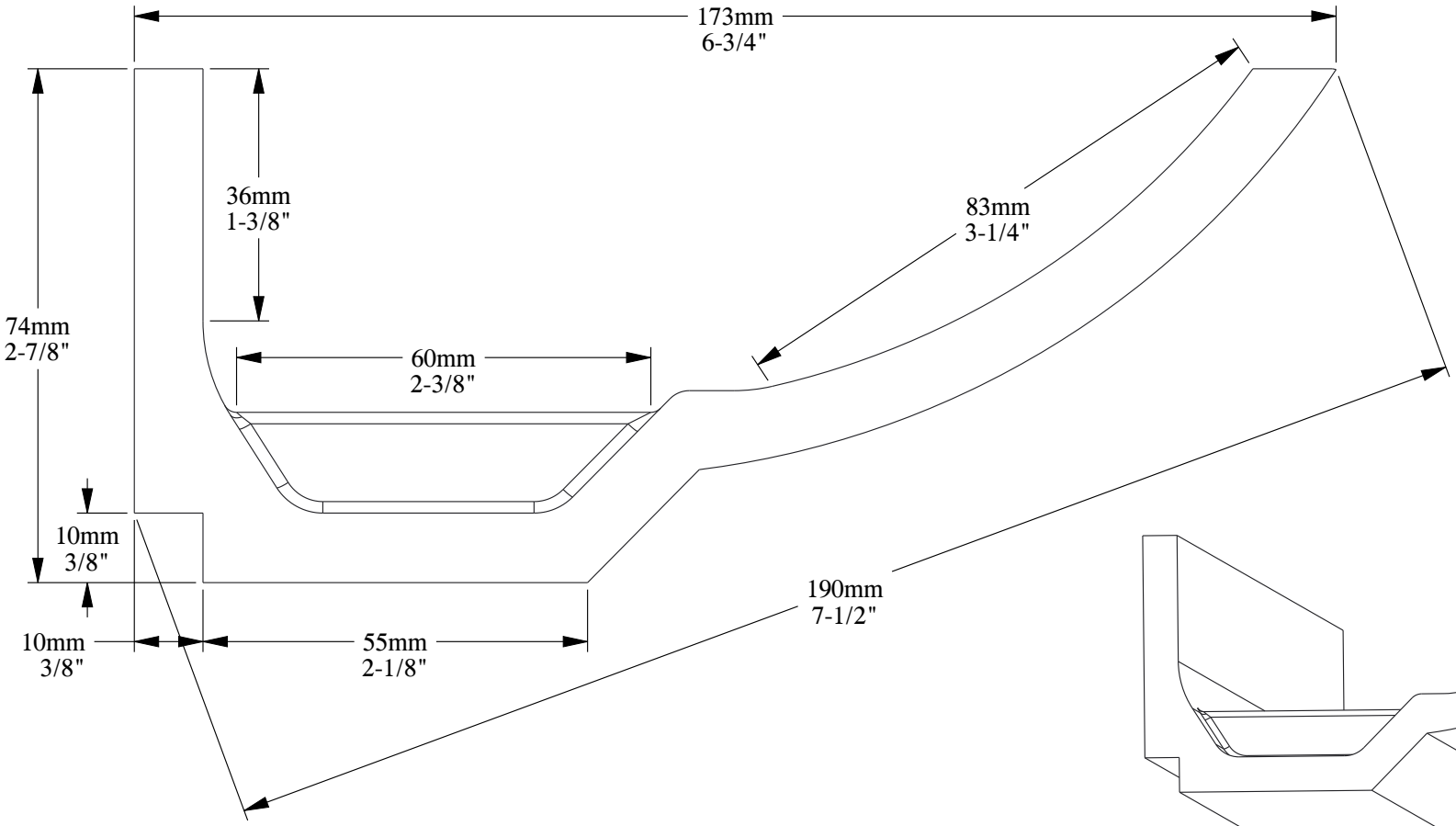

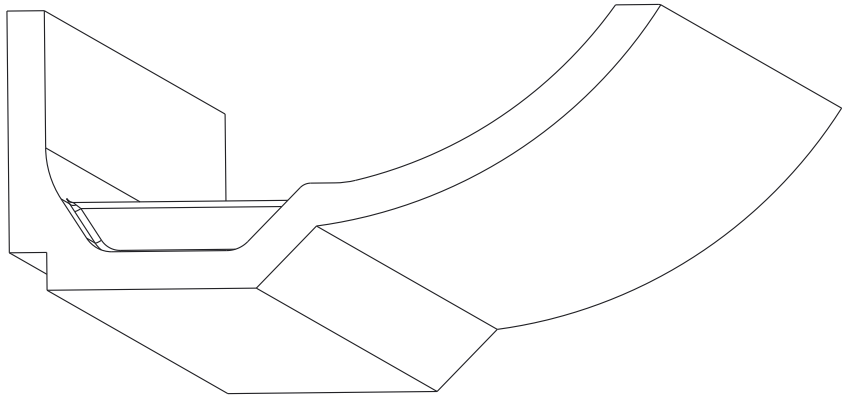

SCALE 1:2

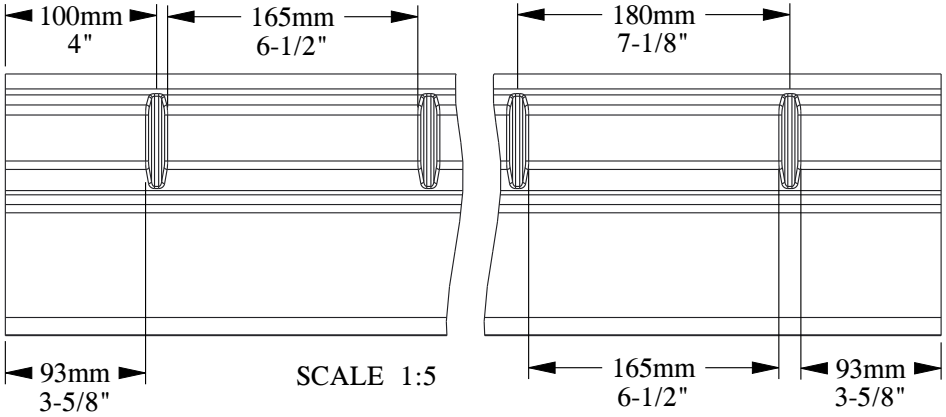

SCALE 1:5

ORAC® DECOR

Biekorfstraat 32
8400 Oostende - Belgium
Tel +32 (0)59 80 32 52
www.oracdecor.com
info@oracdecor.com

Part name: C351

Designed by: Jacques Vergracht

Designed on: 19-Nov-2004

Version: 1.0

Unless otherwise specified: all dimensions are in millimeters and inches, scale 1:1, length 2 meters